Intuitive Pressure-Sensitive Infinite Flying Scroll

CapacMouse

Scroll Differently, Scroll Smarter

extremely

small / slim / soft / silent

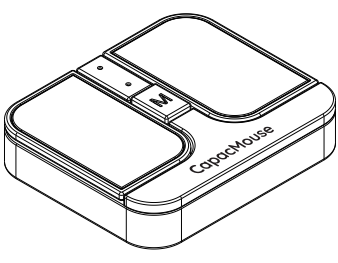

THE MOUSE REVOLUTION

USER MANUAL CAP2

the MagicWheel button

No More *annoying repetitive scroll*

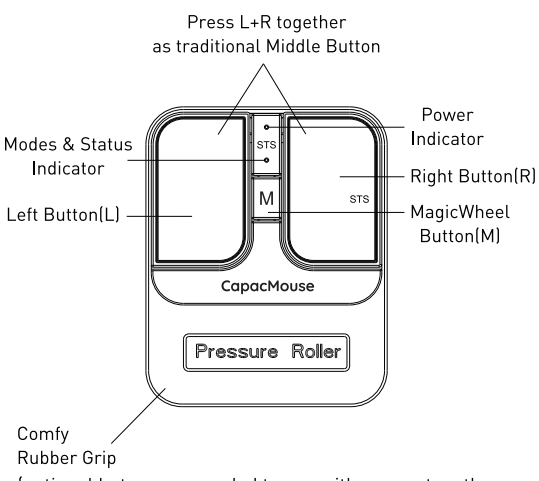

(optional but recommended to use with mouse together for a much more comfortable grip experience)

Super Relaxing!

SIMPLY PRESS TO scroll GO

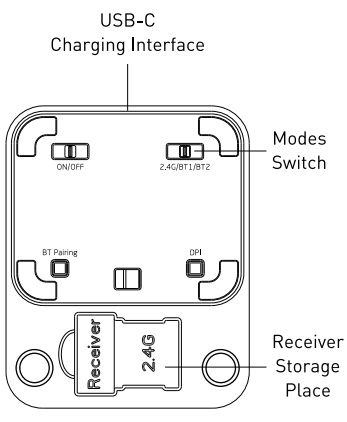

Package Contents

. the CapacMouse	1pc
. Comfy Rubber Grip	1pc
. 2.4G Wireless Nano Receiver	1pc
. USB A-to-C Charging Cable	1pc
. User Manual	1pc

System Requirements

Windows/MacOS/iOS/Android/Linux/Harmony OS with available USB-A port and/or with BT function.

Features

. **Patented** Capacitive Pressure Sensing Technology
. **Patented** Pressure Scrolling Technology
. Extremely Soft & Silent Clicks
. Super Small & Slim, Portable to Carry
. Superb Aluminum Housing
. 3-Ways Connection, Dual BT & 2.4G
. 800 / 1600 / 2400dpi
. Ultra Long Lifespan Buttons
. Working Efficiency Improved Dramatically
. the Carpal Tunnel Syndrome Preventing & Relief

Specifications

. Operating Voltage: 5.0±0.5V
. Operating Current: ≤5mA
. Li-Battery Capacity: 140mAH
. USB 2.0 Full Speed
. Charging Interface: USB-C Port
. Fully Charging Time: around 30mins
. BT Low Energy 5.2v
. 2.4G Requency: 2402~2480MHz
. Working Distance: Around 10m(Open Space)
. Polling Rate: 133Hz
. Tracking Speed: 30ips
. Acceleration: up to 10g
. Dimension: L43mm * W36mm * H8mm
. Product Weight: 16g(w/o cable)

How to Connect & Use

2.4G Mode: Turn the mouse **ON**, then switch to 2.4G mode, the "Modes Status Indicator" shows green light, then put 2.4G Nano Receiver into USB-A interface of PC to be connected.

BT Mode: Turn the mouse ON, then switch to BT1/BT2 mode, the computer will search for the BT devices, press down & hold "**BT Pairing**" button on the backside of the mouse until you see the blue light kept flashing

which means the pairing mode activated, then you can start to use after pairing with PC.

Pairing Name:
CapacMouse-2 5.0 for BT1
CapacMouse-2 5.2 for BT2

Pressure Sensitive "MagicWheel" Button



- Lighter Pressing, Slower Scrolling.
- Heavier Pressing, Faster Scrolling.
- Click for one step scrolling.
- Move the cursor up or down slightly (>2 pixels) to change the scrolling direction freely.

DPI---Cursor Movement Speed Adjustment

Press the "**DPI**" button on the backside of the mouse to switch the cursor movement speed in three stages, The "Modes & Status Indicator" will be flashing upon each operation, flashing once for 800dpi, flashing twice for 1600dpi, and three flashes for 2400dpi.

Infinite Flying Scroll Speed-Ratio Switch

Press and hold the "**L**", "**M**"&"**R**" buttons together for 2s to switch the flying scroll speed-ratio in three stages, The "Modes & Status Indicator" will flash upon each operation, flashing once for regular rate (default), flashing twice for fast rate, and three flashes for hyper-fast rate.

Left Handed Users Preference

Press and hold the "**L**" , "**M**" & "**R**" buttons together for 10s within 5s after turning on the mouse, The "Modes & Status Indicator" will flash 5 times to hint the success swapping of "**L**"& "**R**" button function.

Intelligent Energy Saving

the CapacMouse features an intelligent energy-saving system that activates automatically when the mouse is stationary, ensuring longevity with a single charge.

Trouble Shooting

In case the mouse doesn't work well sometimes, maybe it's caused by low power condition (the power indicator will flash 3 times per minute to hint when the power is low), so please recharge your mouse and/or switch it off & on again.

It's time to drive your new

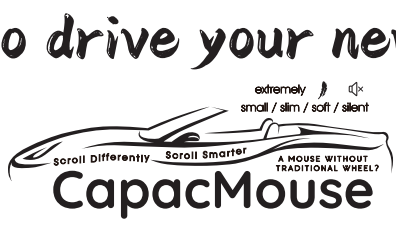

Mfgr.: Shenzhen Interlink Electronics Limited
Add.: F5, Building C, Qiaotong Industrial Park, Yuanling, Shiyan Town, Bao'an, Shenzhen, China.

Made in China